Fiberlane LLC.
9254 Richmond Road
US - 18013 - Bangor, PA
USA

Contact:
Telefon: +1 610 498 4474
Fax: +1 610 498 2602
E-Mail:
info@fiberlanellc.com

Overview

Alu-clamp set 30 mm (1 3/16") - completed with bolt M6 x 35

Product number: 03200000-1

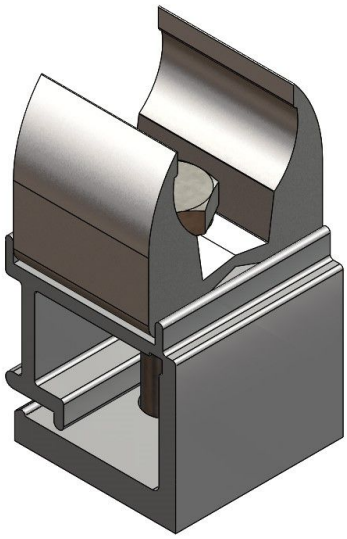

Options

PU (Pcs)

1 | 100

Version

30 mm - complete

Image

Image



Fiberlane LLC.
9254 Richmond Road
US - 18013 - Bangor, PA
USA

Contact:
Telefon: +1 610 498 4474
Fax: +1 610 498 2602
E-Mail:
info@fiberlanellc.com

Description

- **Application area:** Connection between drive wire rope and 19 mm pipe
- **Material:** Aluminum for high stability and corrosion resistance
- **Clamping part:** 30 mm for secure fastening
- **Installation:** Pre-assembled with M6 × 35 screw for easy installation

The **Aluminum saddle clamp 19 mm + clamping part 30 mm** is a proven solution for securely connecting drive wire ropes to 19 mm pipes in shading and ventilation systems. Its high-quality aluminum construction ensures excellent stability and corrosion resistance.

The pre-assembled clamping part, measuring 30 mm, provides reliable fastening, while the included M6 × 35 screw enables quick and easy installation—making the saddle clamp especially practical for professional applications.

This saddle clamp is ideal for use in greenhouses and other demanding environments where a stable and long-lasting connection is essential.