Fiberlane LLC.
9254 Richmond Road
US - 18013 - Bangor, PA
USA

Contact:
Telefon: +1 610 498 4474
Fax: +1 610 498 2602
E-Mail:
info@fiberlanellc.com

Overview

Tower-Roller Plus Set-15 Kg (33 lb)

Product number: 37023713

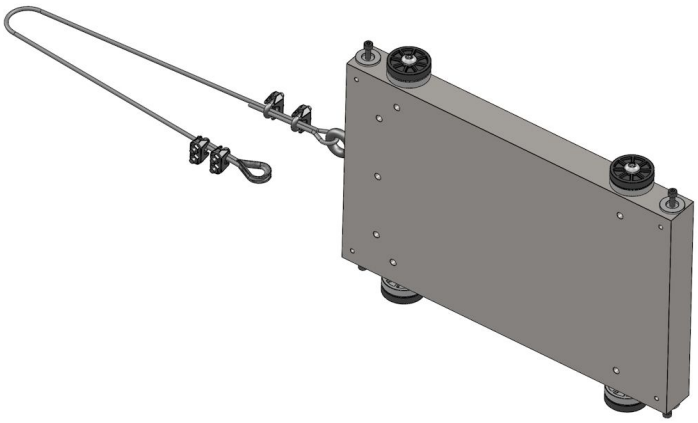

Image

Options

Weight (kg)

15

Fiberlane LLC.
9254 Richmond Road
US - 18013 - Bangor, PA
USA

Contact:
Telefon: +1 610 498 4474
Fax: +1 610 498 2602
E-Mail:
info@fiberlanellc.com

Description

- **Application:** Complete drive unit for roll-up screens and side ventilation systems
- **Weight:** 15 kg counterweight
- **System type:** Tower Roller Plus
- **Features:** Compact design (80 mm depth), integrated cable guide, enclosed counterweight
- **Compatibility:** Suitable for all common motors - counterweight is matched accordingly

The **Tower Roller Plus Set – 15 kg** is a complete drive unit for medium to large roll-up screens, side ventilation systems, and partitioning curtains. It features a compact design, integrated cable routing with energy chain, and a fully enclosed counterweight for enhanced safety. Built for durability and minimal maintenance.