Fiberlane LLC.
9254 Richmond Road
US - 18013 - Bangor, PA
USA

Contact:
Telefon: +1 610 498 4474
Fax: +1 610 498 2602
E-Mail:
info@fiberlanellc.com

Overview

Cable Pulley 75 (2.95 in)/8 (0.31 in) with clamp - double ball bearing

Product number: 04400097



Options

PU

1 Box

Image



Fiberlane LLC.
9254 Richmond Road
US - 18013 - Bangor, PA
USA

Contact:
Telefon: +1 610 498 4474
Fax: +1 610 498 2602
E-Mail:
info@fiberlanellc.com

Description

Thanks to two ball bearings, **the 75 mm pulley** is guided particularly securely on the axle and has a high level of stability under shear loads.

The galvanised steel bracket can be attached to your construction with an **M8 screw**. The retaining bracket can also be detached from the pulley to make installation **as easy as possible**, even in installation situations that are difficult to access.



- Impact resistant pulley
- Galvanised steel bracket
- Two ball bearings
- Load capacity: up to 350 kg
- Made in Germany

Fiberlane LLC.
9254 Richmond Road
US - 18013 - Bangor, PA
USA

Contact:
Telefon: +1 610 498 4474
Fax: +1 610 498 2602
E-Mail:
info@fiberlanellc.com

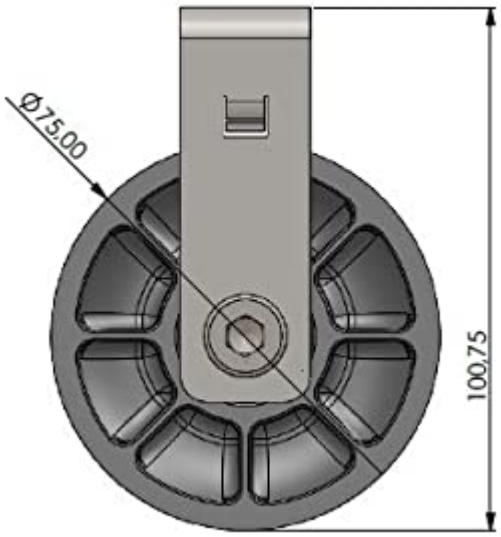

- Outer diameter: 75 mm
- Total height: 100,75 mm

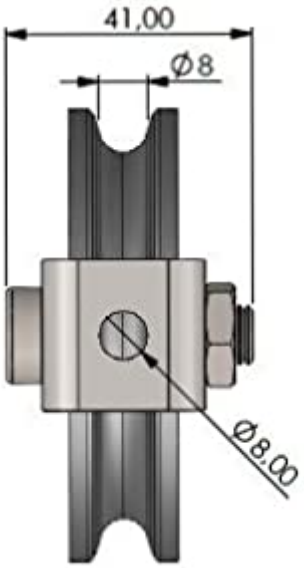

- Total width: 20 mm
- Rope diameter: up to Ø 8 mm
- Fastening with M8 screw / bolt