Fiberlane LLC.
9254 Richmond Road
US - 18013 - Bangor, PA
USA

Contact:
Telefon: +1 610 498 4474
Fax: +1 610 498 2602
E-Mail:
info@fiberlanellc.com

Overview

Tube motor support 50.50 square tubes - for RB 50, TGU tube motor

Product number: 25250021

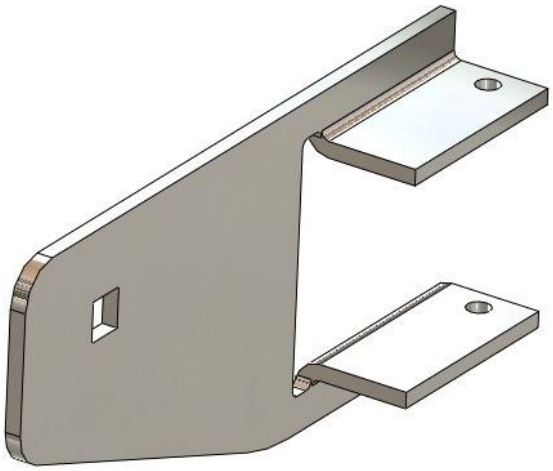

Image

Options

Version

E+ | RB50 / FRM 50 | RB120

Fiberlane LLC.
9254 Richmond Road
US - 18013 - Bangor, PA
USA

Contact:
Telefon: +1 610 498 4474
Fax: +1 610 498 2602
E-Mail:
info@fiberlanellc.com

Description

- **Application:** Shaft support for suspended shading systems with gable drive
- **Material:** Hot-dip galvanized steel for high stability and corrosion resistance
- **Installation:** Square tubes are flanged directly onto the motor support
- **Special feature:** Easy installation without manual alignment of the drive shaft
- **Compatibility:** Suitable for RB 50 and FL 50 tube motors
- **Scope of delivery:** Bolts and nuts not included

The **Tube Motor Support 50.50** positions the drive shaft precisely for the motor system and simplifies installation thanks to its intuitive handling. It is ideal for suspended shading systems with gable drive. Square tubes are mounted directly onto the support, eliminating the need for manual shaft alignment. The galvanized steel construction ensures long-term durability and corrosion protection.

All prices excl. VAT plus shipping costs and possible delivery charges, if not stated otherwise.