Fiberlane LLC.
9254 Richmond Road
US - 18013 - Bangor, PA
USA

Contact:
Telefon: +1 610 498 4474
Fax: +1 610 498 2602
E-Mail:
info@fiberlanellc.com

Overview

Cable pulley 52 (2.05 in)/8 (0.31 in) - PU = 50 pcs

Product number: 04300099

Options

Version:

Ball bearing | Plain bearing

PU

1 | Box

Image

Fiberlane LLC.
9254 Richmond Road
US - 18013 - Bangor, PA
USA

Contact:
Telefon: +1 610 498 4474
Fax: +1 610 498 2602
E-Mail:
info@fiberlanellc.com

Description

Due to the extra wide plain bearing, the 52 mm pulley is guided particularly safely on the axle and has a high stability under shear loads.

Together with the plain bearing, the pulley is made of 100 % plastic and is therefore completely protected against corrosion and other environmental influences.

- Impact resistant pulley
- Plain bearing inserts
- Load capacity: up to 150 kg
- Made in Germany

Fiberlane LLC.
9254 Richmond Road
US - 18013 - Bangor, PA
USA

Contact:
Telefon: +1 610 498 4474
Fax: +1 610 498 2602
E-Mail:
info@fiberlanellc.com

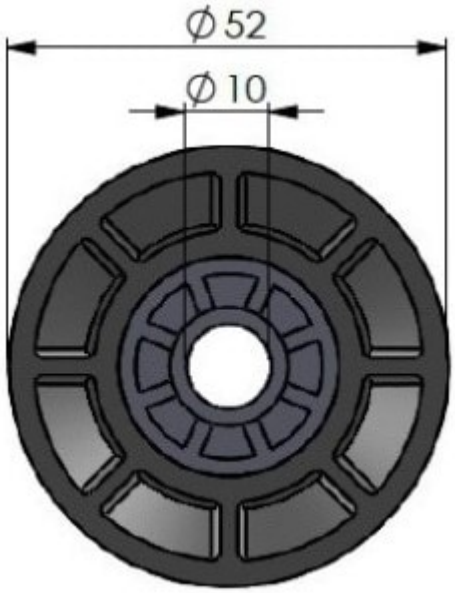

- Outer diameter: 52 mm
- compatible with 10 mm bolt

- Total width: 20 mm
- Rope diameter: up to Ø 8 mm