Fiberlane LLC.
9254 Richmond Road
US - 18013 - Bangor, PA
USA

Contact:
Telefon: +1 610 498 4474
Fax: +1 610 498 2602
E-Mail:
info@fiberlanellc.com

Overview

Cable pulley with clamp 50.50 (1.97/1.97 in) - PU 25 pcs

Product number: 04050050

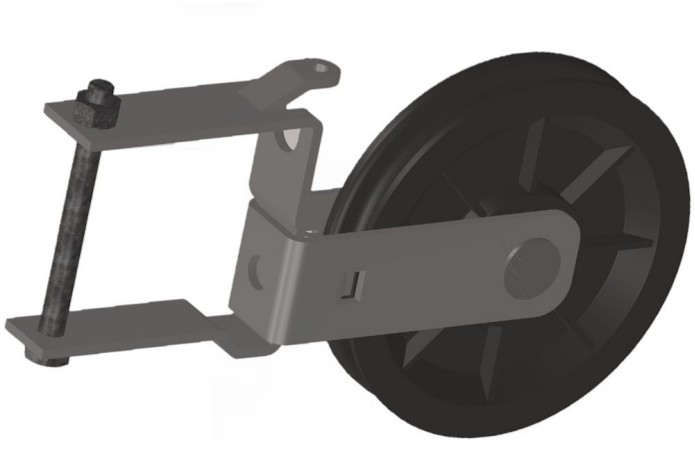

Options

PU (Pcs)

1 | 25

Image

Image



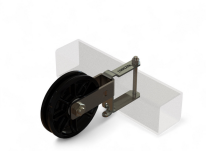

Fiberlane LLC.
9254 Richmond Road
US - 18013 - Bangor, PA
USA

Contact:
Telefon: +1 610 498 4474
Fax: +1 610 498 2602
E-Mail:
info@fiberlanellc.com

Description

- **Application:** Bolt-on cable pulley for square tubes in shading and ventilation systems
- **Material:** Pulley made from impact-resistant plastic - bracket made from zinc-plated steel
- **Compatibility:** Fits square tubes sized 50 x 50 mm
- **Wire Diameter:** Suitable for wire ropes up to 3 mm
- **Installation:** Mounted using M6 x 65 bolt and M6 nut

Cable Pulley 90 with clamp 50.50 is a robust and reliable solution for cable guidance in greenhouse shading and ventilation systems. It is bolted directly onto square tubing and aligns precisely with the wire rope for smooth operation.

The pulley is crafted from durable, impact-resistant plastic, while the bracket is made of zinc-plated steel, providing excellent strength and corrosion protection in greenhouse environments.