Fiberlane LLC.
9254 Richmond Road
US - 18013 - Bangor, PA
USA

Contact:
Telefon: +1 610 498 4474
Fax: +1 610 498 2602
E-Mail:
info@fiberlanellc.com

Perfiles

Imagen	Nombre	Número de producto
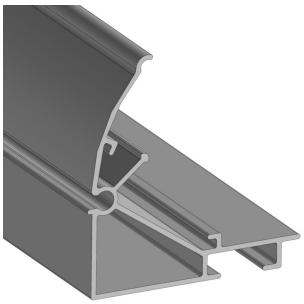	**Perfil de malla I - L = 6,40 m (21 ft)**	
	UDE: haz	37000641
	UDE: Lotes	37000640
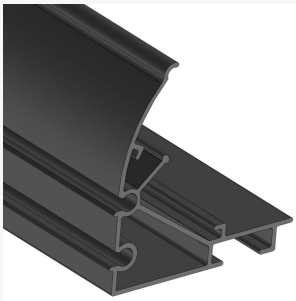	**Perfil de malla II - 6,40 m (21 ft)**	
	UDE: haz	37001641
	UDE: Lotes	37001640
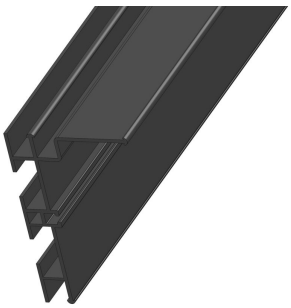	**Perfil de malla V - 6,40 m (21 ft)**	
	UDE: haz	37003642
	UDE: Lotes	37003643

All prices excl. VAT plus shipping costs and possible delivery charges, if not stated otherwise.

Fiberlane LLC.
9254 Richmond Road
US - 18013 - Bangor, PA
USA

Contact:
Telefon: +1 610 498 4474
Fax: +1 610 498 2602
E-Mail:
info@fiberlanellc.com

Imagen	Nombre	Número de producto
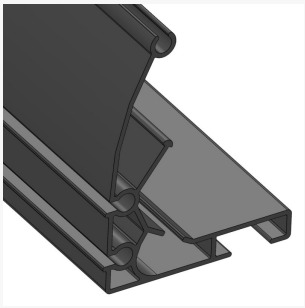	**Perfil de malla III - L=6,40 m (21 ft)**	
	UDE: haz	37003641
	UDE: Lotes	37003640

All prices excl. VAT plus shipping costs and possible delivery charges, if not stated otherwise.